YAVAPAI BLOCK CO., INC.
YAVAPAI PRECAST
1389 Masonry Way
Prescott, Arizona 86301
928-445-4340 1-800-649-4340
fax: 928-445-4383 www.yblock.com

DATE
OCTOBER 15, 2007

DRAWING NO.
483030CONE

48" ID X 30" TALL CONE SECTION (30" OPENING)

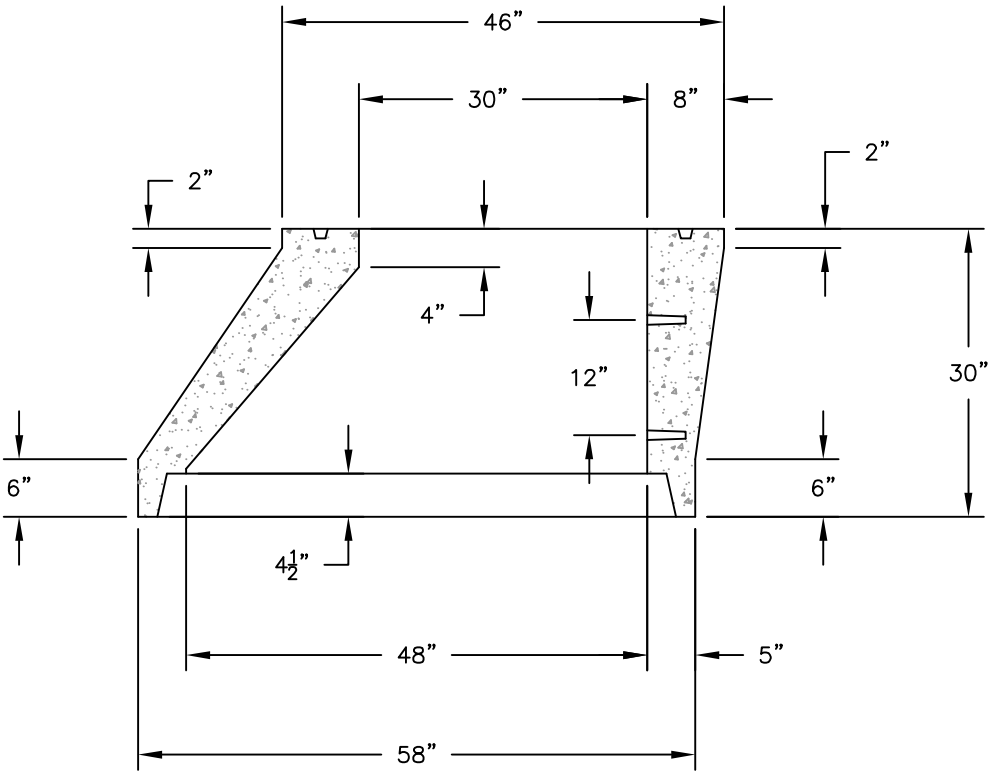

NOTES:

1. ALL CONCRETE, REINFORCING, STEPS AND SEALANT SHALL MEET OR EXCEED ASTM C-478 SPECIFICATIONS.
2. CONCRETE COMPRESSIVE STRENGTH SHALL BE 4000psi MINIMUM.

FILE NAME: 483030CONE.1007.DWG SCALE: NONE